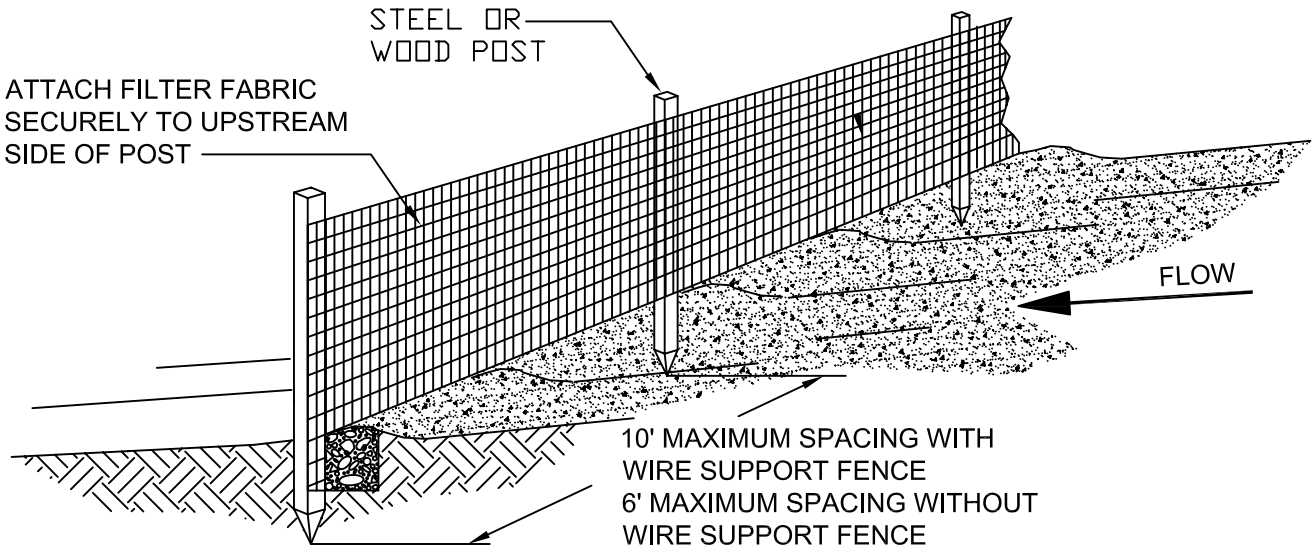

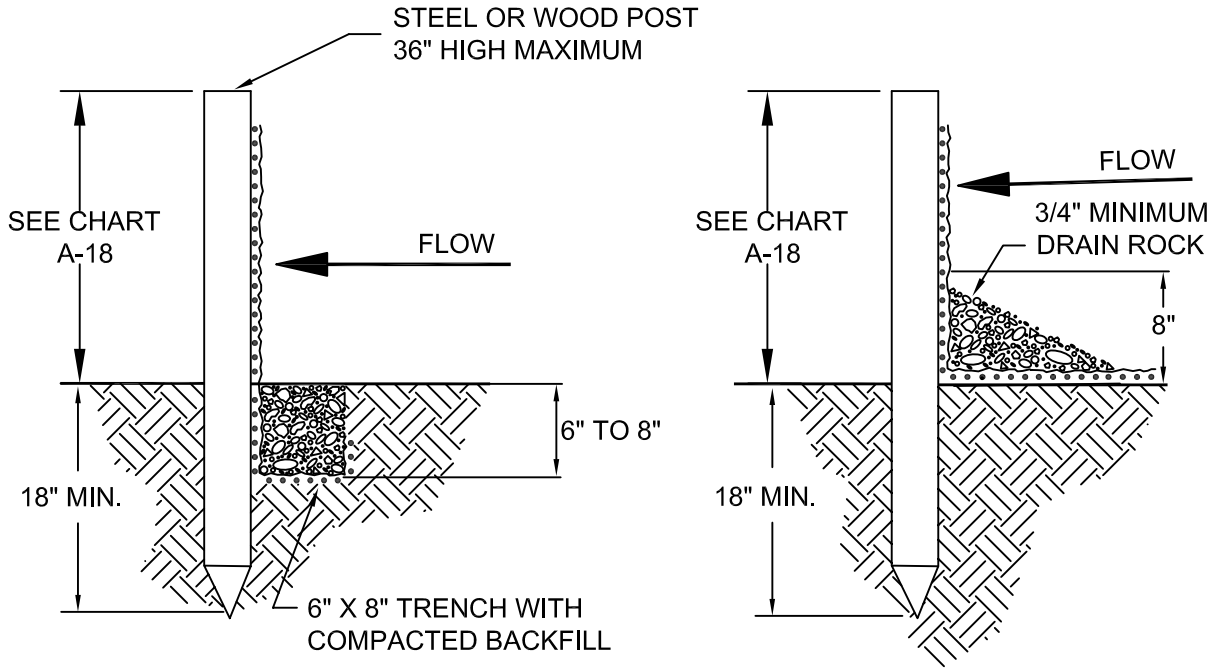

TRENCH DETAIL

INSTALLATION WITHOUT TRENCHING

REVISIONS

City of Cumming

Department of Utilities - Distribution and Collection Division

EROSION CONTROL
SILT FENCING

W-52