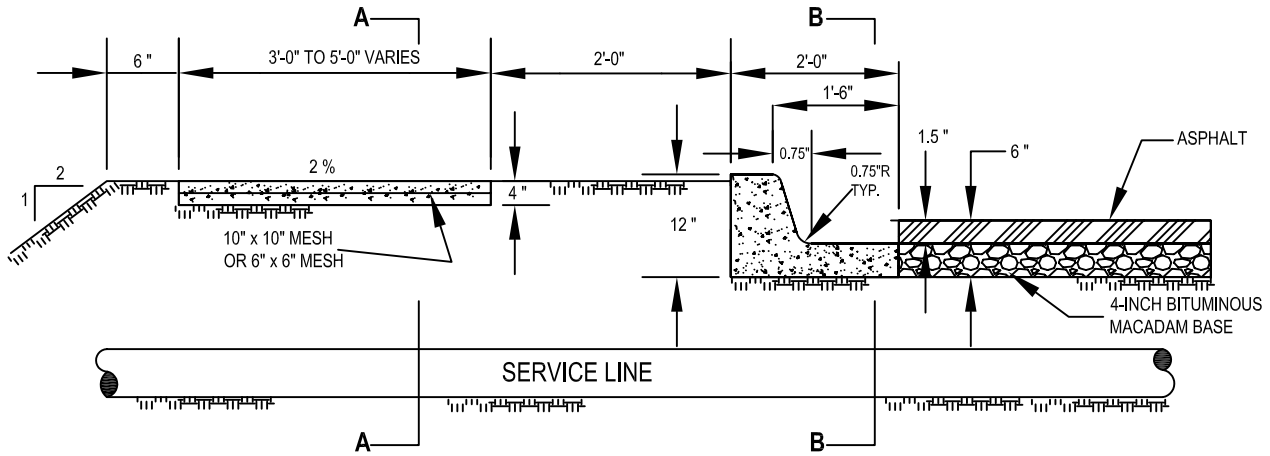

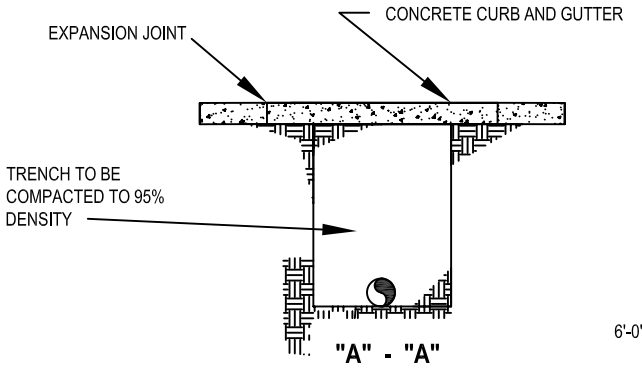

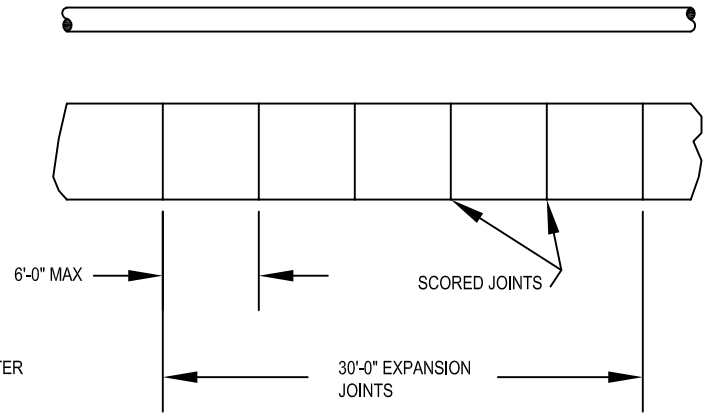

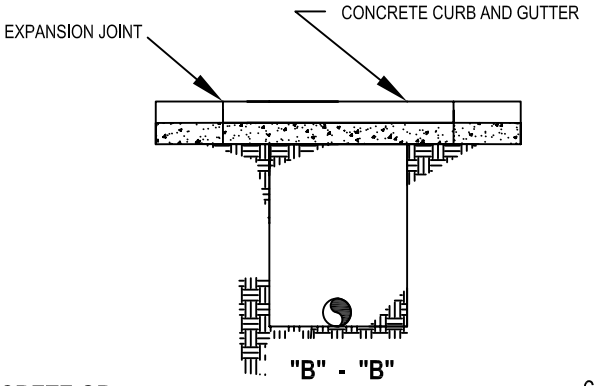

NOTES:

1. DETAILS ARE TYPICAL

2. REPLACE SIDEWALKS CURB AND GUTTER AND CURBING TO MATCH EXISTING MATERIALS OR AS DIRECTED.

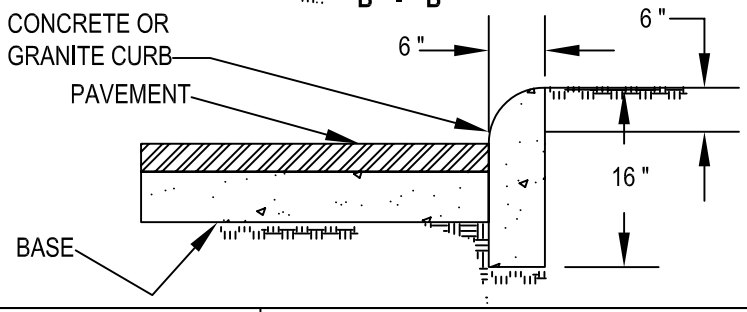

REVISIONS

City of Cumming

Department of Utilities - Distribution and Collection Division

SIDEWALK, CURB AND GUTTER REPAIRS

W-51