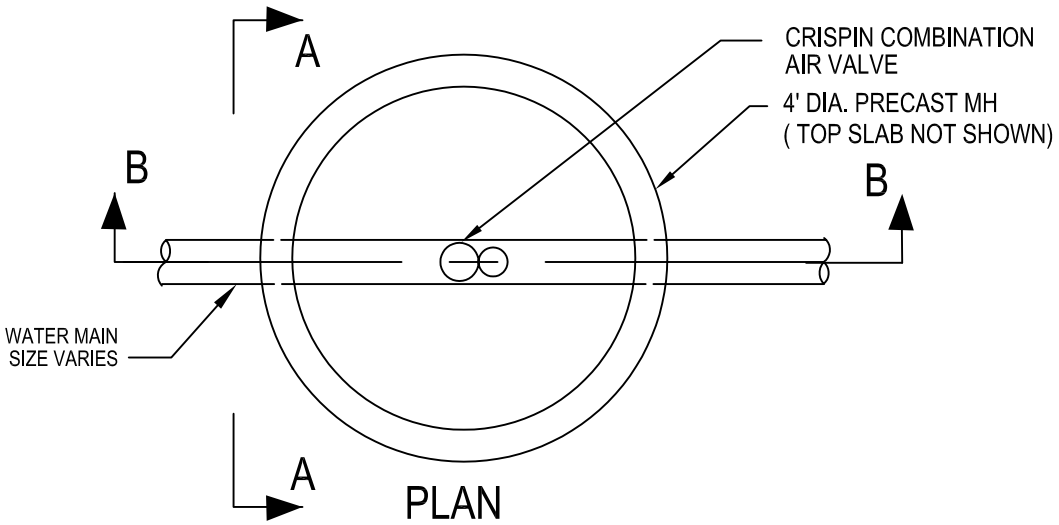

PLAN

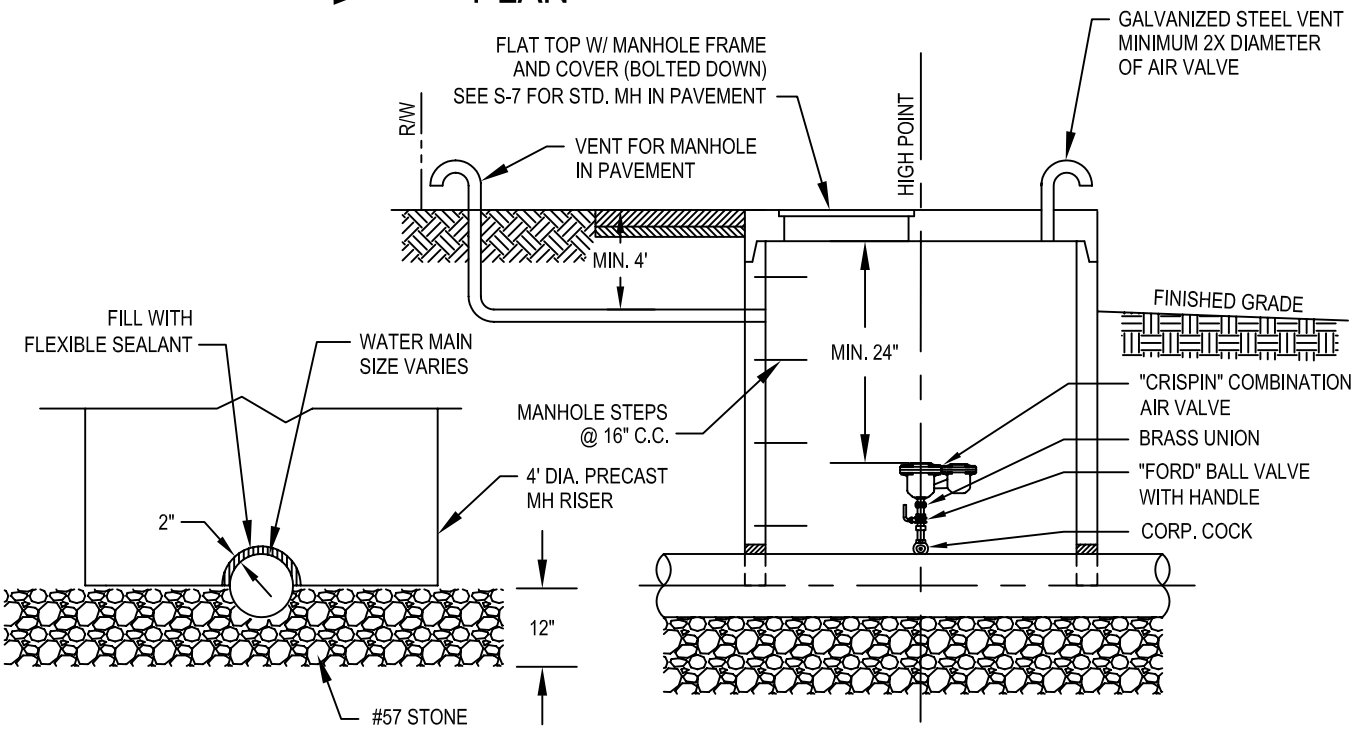

SECTION A-A

SECTION B-B

NOTES

1. ALL NIPPLES TO BE "ALL THREADED" MINIMUM LENGTH.
2. ALL PIPE TO BE RED BRASS.
3. ALL FITTINGS TO BE BRASS.

AIR VALVE SIZING	
MAIN SIZE	AIR VALVE SIZE
6" - 12"	1"
14" - 16"	1-1/2"
20" - 30"	2"
36" - 42"	2"

VALVE MAY NOT BE LOCATED UNDER PAVEMENT WITH MANHOLE IN THE FLOW OF TRAFFIC. IF MANHOLE MUST BE IN PAVEMENT, IT IS TO BE VENTED TO OUT OF THE PAVEMENT AND FLOW OF TRAFFIC.

REVISIONS

12/07/09

City of Cumming

Department of Utilities - Distribution and Collection Division

AIR VALVE INSTALLATION

W-39