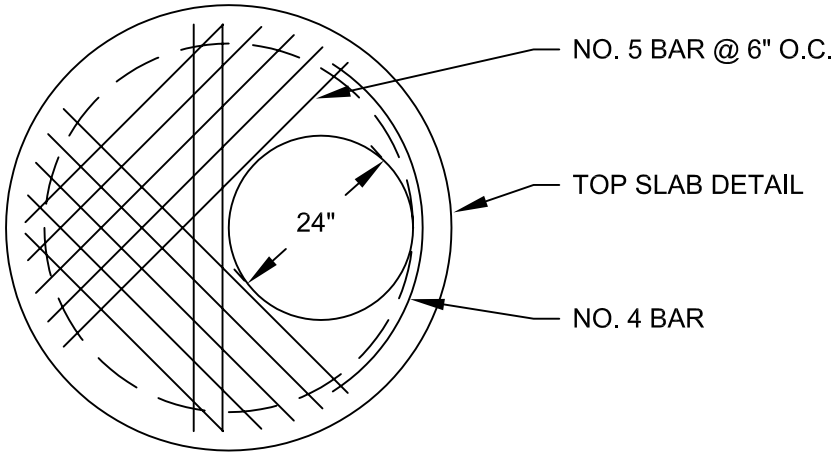

TOP SLAB DETAIL

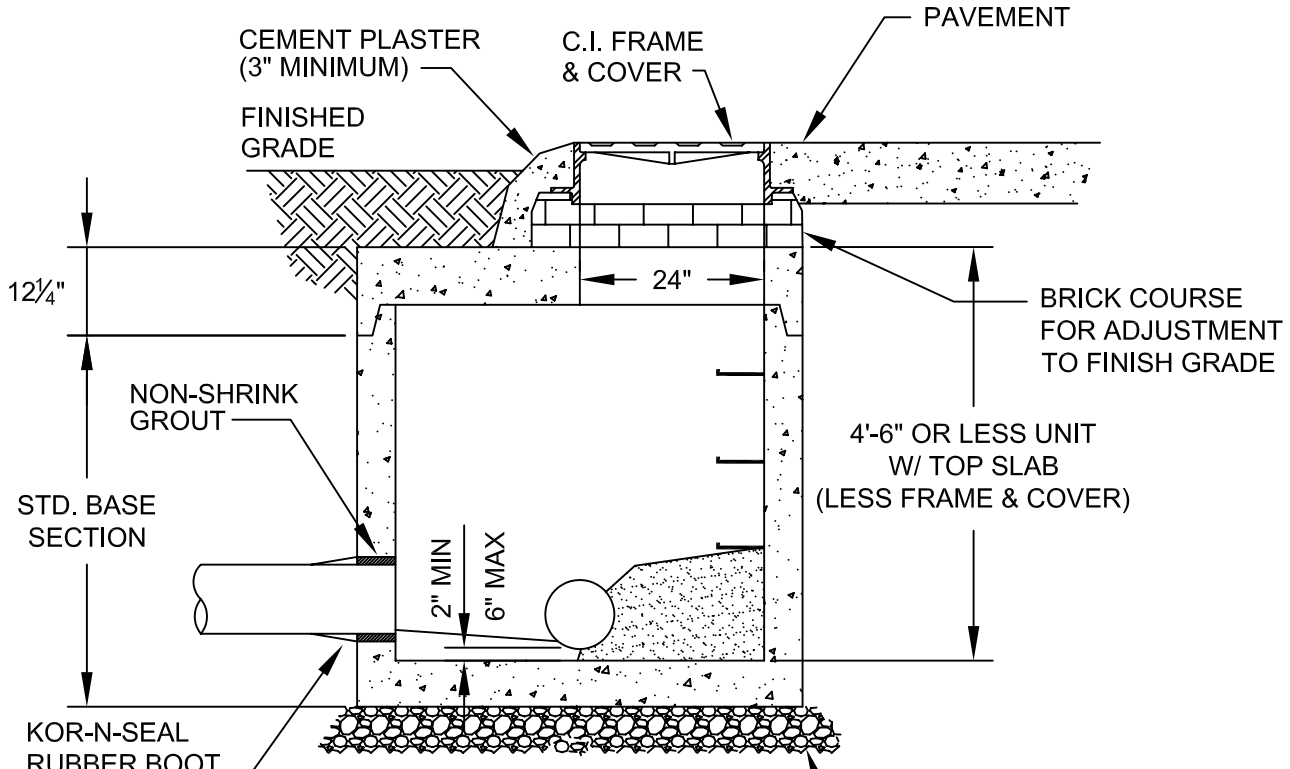

TYPICAL SECTION

NOTE:

MANHOLE DESIGN SPECIFICATION CONFORMS TO: PRECAST REINFORCED CONCRETE MANHOLE SECTIONS A.S.T.M. DESIGNATION C-478 LATEST REVISION. CONCRETE COMPRESSIVE STRENGTH 4000 psi @ 28 DAYS.

REVISIONS

City of Cumming

Department of Utilities - Distribution and Collection Division

STANDARD SHALLOW MANHOLE

S-9