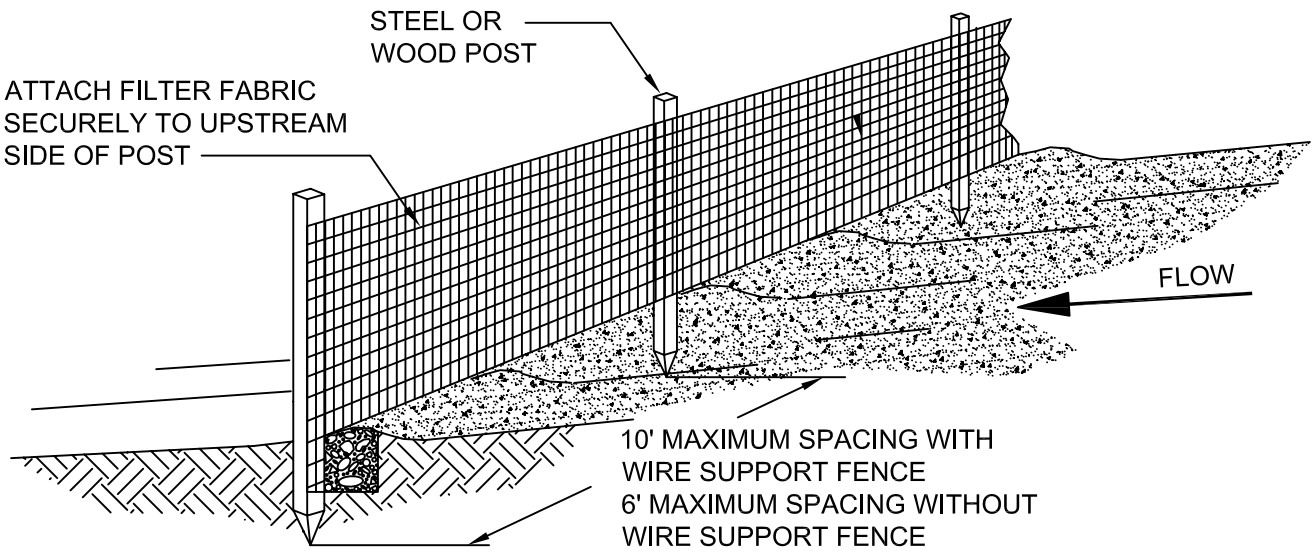

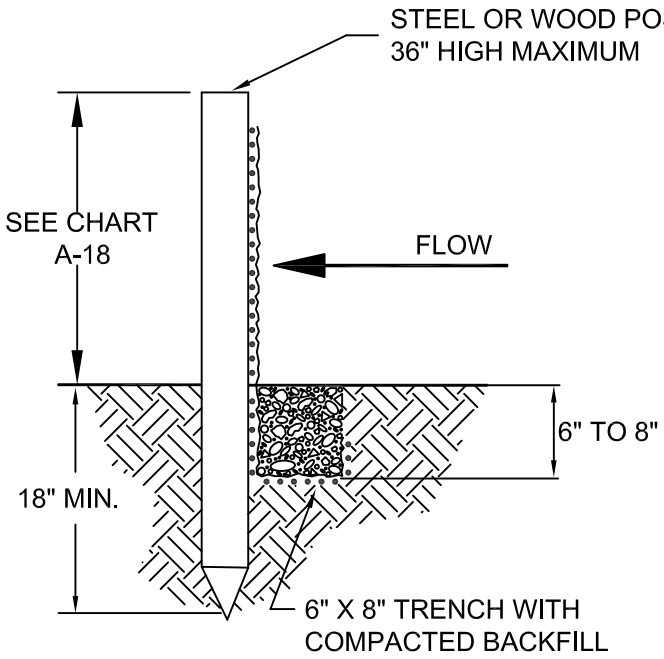

TRENCH DETAIL

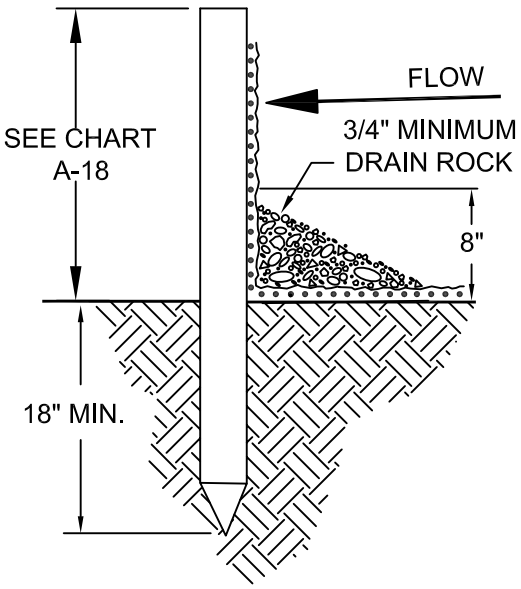

INSTALLATION WITHOUT TRENCHING

REVISIONS

City of Cumming

Department of Utilities - Distribution and Collection Division

SEDIMENT BARRIER EROSION CONTROL - SILT FENCE

S-19